LANGO®

Operating instructions

Diaphragm motor-driven metering pump

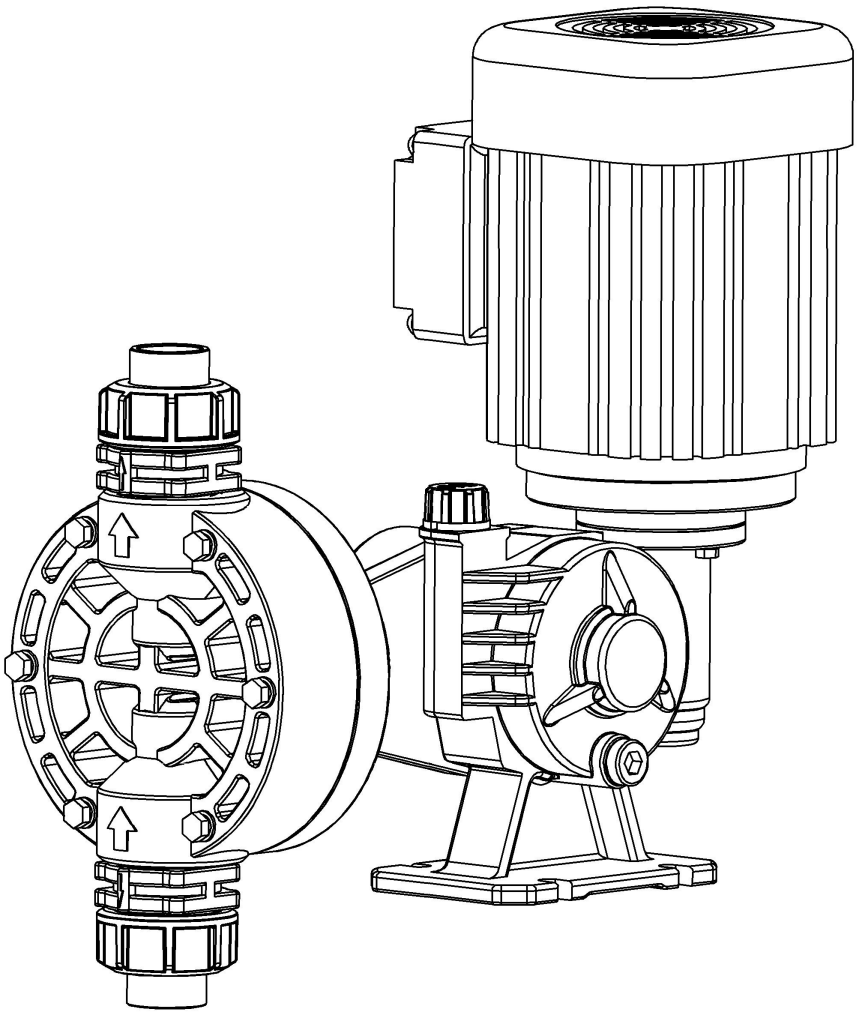

1.Please carefully read these operating instructions before use.

2.Please keep this operation manual in a place where actual users can see it immediately.

3.The operator shall be liable for any damage caused by installation or operating errors.

Supplementary information

Read the following information entirely!



The following are highlighted separately in the document:

- Enumerated lists
- Operating guidelines

Information

i	This provides important information relating to the correct operation of the unit or is intended to make your work easier.

Safety notes Safety notes are identified by pictograms - see Safety Chapter.

User information Read the operation manual to complete the metering pump operation correctly and properly.

Please read the operating instruction completely before using the product. Don't throw it away!

Indicate the model number and serial number

When sending back metering pumps or ordering spare parts, please inform us of the identification number and series number on your metering pump label so that we can confirm its model and material.

Table of contents

1. Identity code …… 1

2.Safety notes …… 2
2.1 Pump ……2
2.2 Safety chapter ……2
2.3 Storage,transport,assembly and disassembly…… 4

3.Pump …… 5
3.1 Parts description ……5
3.2 Function description ……5

4.Assembly ……7
4.1 Assembly……7
4.2 Pilot run ……8

5. Maintenance ……10

6.Troubleshooting …… 12
6.1 Troubleshooting solution……12
6.2 Disuse of the product ……13

7.Technical data…… 14
7.1 Technical data……14
7.2 Ambient conditions ……14
7.3 Noise ……15

8. Dimensional drawings ……16

9. Performance curve ……17

1 . Identity code

1.1 Identity code

GX	Model	Capacity							
		Bar	L/h						
	120	5	120						
	260	5	260						
	400	5	400						
		Pump head/Check valve material							
		PC	PVC and EPDM seal material						
		TT	PVDF and PTFE seal material						
		SS	Stainless steel and PTFE seal material						
			Pump head:						
			0	Standard					
				Connection					
				0	Standard threaded connection (see the performance data table)				
				1	Tube connection, PVC tube connection				
				2	Tube connection, PVDF tube connection				
				3	Stainless steel threaded connection				
					Motor*:				
					S	Triphase,380V,50Hz			
					L	Triphase,explosion-proof motor, 380V,50Hz			
					R	Triphase, variable frequency motor, 380V,2.5-50Hz			
					0	Additional driver (without motor)			
					1	No motor, B14 flange 105/71			
							Explosion-proof grade		
						0	General non-explosion-proof (IP55)		
						1	ExdIIBT4(IP55)		
						2	ExdIICT4(IP55)		
								Default option	
							00	Default option	

*If other motors are selected, technical approval must be obtained from the company's technical department.

2 .Safety notes

2.1 About our pump

This series metering pump is a kind of high efficiency diaphragm metering pump. It is compact and saves energy with high measurement accuracy. The flow rate can reach 400L/h.

2.2 Safety chapter

Safety information instruction

The following marks are used in this manual to indicate the severity of different hazards.

Signals	Meaning
WARNING	Ignoring this safety information can result in life-threatening or serious consequences
CAUTION	Ignoring this safety information can result in injury or damage to the product

Different danger warning signal

This manual uses the following graphical symbols to describe different hazards.

Signals	Hazards type
	Danger zone warning
	Prevent electric shock hazard

Proper use of the product

- This pump can only be used to measure liquid chemical media.
- This pump can only be used after correct installation, according to the technical data and parameters of the manual.
- It is strictly prohibited to be used for other purposes and modification.
- Cannot be used for measuring gaseous medium and solid.
- Do not operate outside the specified area.
- Cannot measure flammable liquids.
- Cannot measure flammable liquids.
- The corresponding instructions in the operation manual should be followed at different stages of the product life.

Safety information



Measure dangerous or unknown chemicals.

If a dangerous or unknown chemical is measured, a leak may occur. Before using the pump, take appropriate measures (eye protection tools, special gloves, etc.). Read incoming chemical safety data sheet.

Before using the metering pump, drain the hydraulic end.

2 . Safety notes



Beware of chemical sprays.
If there is pressure on the hydraulic end or adjacent parts, chemicals may be ejected.
Pressure relief treatment shall be performed prior to any maintenance or overhaul.



An inappropriate stoichiometric agent may damage pump components in contact with it.
To consider the resistance of materials to chemicals, visit our official account for a list.



Beware of personal danger and material damage
The use of untested third-party components may result in personal danger and material loss.
Only for parts we recommend and test.



Misoperation or lack of maintenance can lead to risks.
Make sure the pump is in working condition at all times.



Pay attention
Warning of illegal operation
Strictly comply with product installation regulations

Emergency situation

The metering pump should not be cut off suddenly
In case of power failure, disconnect the main cable or press the emergency switch mounted on the side of the system.
In case of leakage of the delivered chemical, refer to the corresponding data sheet. In this case, it may be enough to turn the multifunction switch to stop and turn off the pump. It also needs to release pressure from the hydraulic system inside the pump.

Personnel conditions for various operations

Operations	Qualification
Storage，transport，assembly,disassembly	Technician
Installation, installation of hydraulic system	Technician
Electrical installation	Electrician
Operation	Trained and qualified personnel
Maintenance and repair	Technician

Disuse, waste gas treatment	Technician
resolve the malfunction	Technician，Electrician，Trained and qualified personnel

Requirements：●Electrician：Able to complete electrical system work, professional training, independent work ability and rich experience, and understand the relevant rules and regulations, understand the relevant standards and management regulations, must comply with the relevant regulations.

●Trained and qualified personnel：Trained in the potential risks of correct and incorrect operations.

●Technician：Ability to independently perform tasks assigned to him, identify and avoid hazards.

●Sound pressure level noise：Noise intensity less than 70dB(A)DIN EN 12639(measurement of pump noise) at maximum stroke length, maximum stroke frequency and maximum back pressure.

2 . Safety notes

2.3 Storage，transport，assembly,disassembly

Safety information



Warning

It is forbidden to use metering pumps to transport radioactive materials, and used materials cannot be returned to the company. The metering pump can be returned for maintenance only after it is scrubbed clean and the pump head is thoroughly cleaned. Despite cleaning and emptying, information related to the safety declaration should be filled in for safety reasons.



The safety statement is part of the inspection and repair order and is completed by a qualified person at the pump user before testing and repair can take place.

Incorrect and improper storage and transportation can damage the metering pump.



- Carefully packed during storage and transportation, preferably with the original packing of the pump.

Storage and transportation of metering pumps shall be in accordance with the specified conditions.

B: The outer packing must be protected from moisture and chemicals.

Products list Check invoice

·Metering pump

·General instruction for the pump

Environment situation

Parameter	Data	Unit
Minimum storage and transport temperatures	-10	℃
Maximum storage and transport temperatures	+50	℃
Maximum air temperature*	95%No condensation	

*No condensation

3 .Pump introduction

3.1 Parts

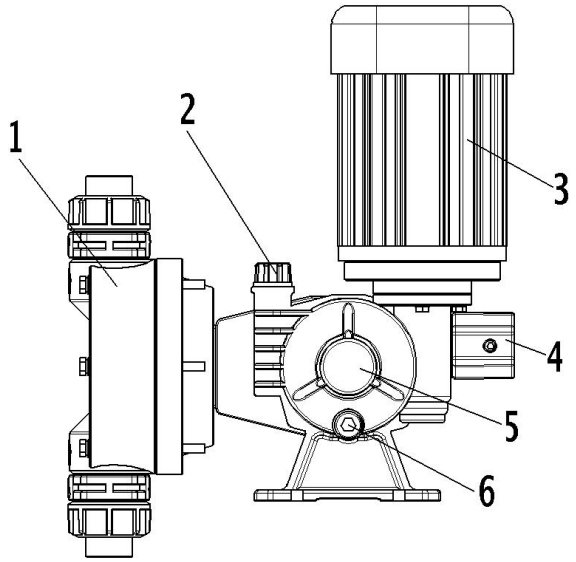

1 Fluid end

2 Exhaust plug

3 Motor

4 Stroke control knob

5 Driver element

6 Oil plug

3.2 Functional description

3.2.1 Driver element

This series metering pump is reciprocating diaphragm metering pump, stroke length can be adjusted. It is driven by the motor through the turbine drive mechanism to produce rotary motion, and through the eccentric CAM, diaphragm connecting rod will be rotary motion into reciprocating motion. A powerful return spring presses the stroke regulating rod against the eccentric CAM to produce a return stroke, and the length of the return stroke is adjusted by adjusting the knob and the stroke regulating rod to define the return stroke.

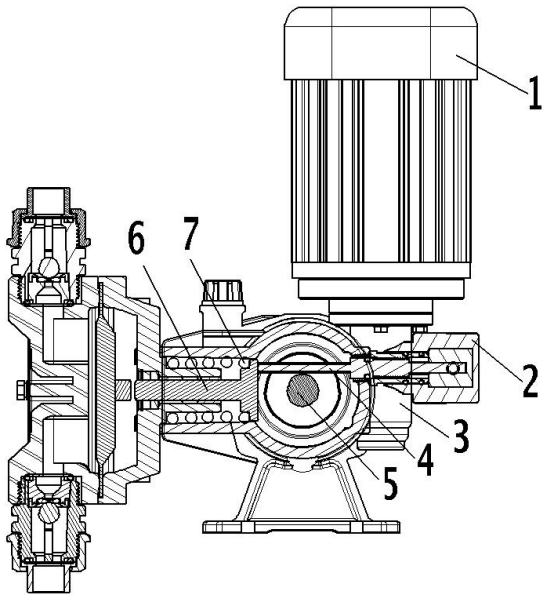

1 Drive motor

2 Stroke control knob

3 Turbodrive mechanism

4 Stroke control lever

5 eccentric cam

6 The diaphragm connecting rod

7 reset spring

3 .Pump introduction

3.2.2 Diagram of stroke motion

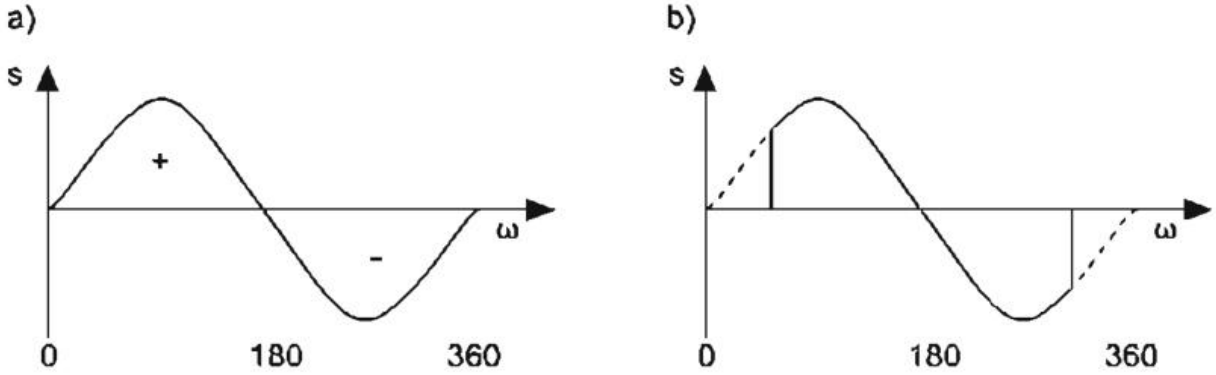

a）Maximum stroke length　　b）Non-maximum stroke length

S Stroke speed　　ω The Angle of rotation of an eccentric CAM　　+ Drain end stroke

− Suction end stroke

3.2.3 Fuild end

The diaphragm seals the pump head. The diaphragm moves in the pump head, the suction valve closes, and the chemical medium flows out of the pump head through the discharge valve. When the diaphragm moves in the opposite direction, the discharge valve closes, negative pressure is generated in the pump head, and the chemical medium enters the pump head through the suction valve. This completes the cycle.

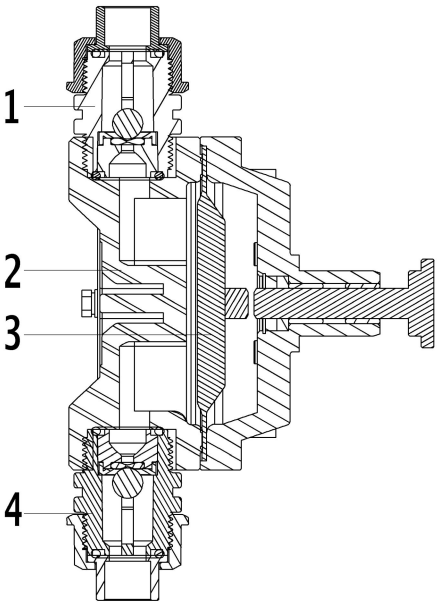

1 Drain valve

2 Pump head

3 Diaphragm

4 Suction valve

4 . Installation

4.1Installation

4.1.1 Connection installation

Warning

Notice how the chemical reacts with water.

Chemical media should not come into contact with water at the hydraulic end, which may cause residual water during working tests.

−Blow dry through the connector below the hydraulic end.

−Flush with neutral medium through suction end connector.

4.1.2 Electrical installation

Warning

Danger of electric shock

Electrical installation should be operated by trained personnel.

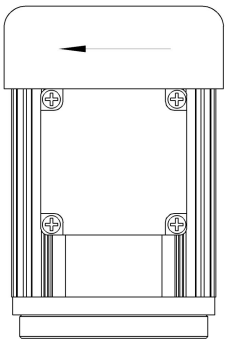

Warning

The pump may be damaged.If the motor turns backwards, the pump may be damaged.

−When wiring the motor, pay close attention to the direction of rotation of the motor,

Motor housing is identified by arrows.

Warning

Environmental damage or device damage may occur.

The oil outlet is fixed by nut when leaving the factory, which can prevent the pressure difference between inside and outside the driving cavity.

−Replace nut with hose.

−Keep the nut for later transportation.

4.2 Trial operation

Check the oil level	When the pump is not working, check whether the oil level is in the middle of the window.
Check the rotation direction	Check whether the motor rotation direction is correct.

Adjust stroke length

Information

−Adjust the stroke length only when the pump is running.

−The number on the stroke control knob stands for x10%.

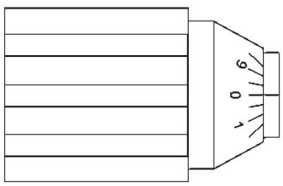

图7 1圈=100%冲程

4 . Installation

Adjust the pump correctly

- Choose the largest possible stroke length for viscous chemical materials.
- Use the largest possible stroke length for liquids containing gases.

- If you want a better mix, you can use a higher punching frequency.
- For accurate measurement, stroke length should not be less than 30%.

Eradicate reflux problems (TTT and SST only)

During the trial run, if backflow occurs, ball and pad are tightly fitted to prevent backflow. Remove valve and hydraulic end and place on a hard surface using a copper rod (2) and hammer (1) to gently knock the PTFE seat through the valve ball. See below.

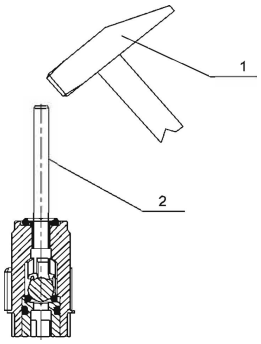

Picture 8: Tap on the seat

1 Hammer, about 300 grams

2 Copper rod, diameter 9mm, length about 200mm

4.3 Maintenance

Be careful of chemical splashing.

Chemicals may spill out of the hydraulic end due to pressure differences. Before treatment, the system should be depressurized.

4.3.1 Standard hydraulic end

Interval	Maintain task	Staff
About every 5,000 hours	Replace the gear oil	Operation staff
Every season*	・Check whether the dosing pipe is firmly connected to the pump. ・Check suction valve and drain valve are firm. ・Check that the entire hydraulic end is sealed, especially around the exhaust pipe. ・Check whether the flow is normal: you can simply start the pump. ・Check whether electrical connections are in good condition. ・Check whether the thread of dosing head is firm.	Operation staff

*Under normal load under heavy load (for example, continuous operation) : short intervals

4.3.2 Replace the gear oil

Drain gear oil (1) remove the exhaust plug (2) put an oil container under the oil plug (3) remove the oil plug (4) start to drain oil from the drive cavity (5) replace the new gasket

5 .Maintenance and fix

Add gear oil (1) tighten the oil plug (2) start the pump (3) slowly add gear oil, know the oil level indicator (4) let the pump run for 1-2 minutes
⑤ Observe whether the oil level changes

Tighten the torque

Parameter	Data	Unit
Screw torque	9.0	Nm

5.1 Fix



Be careful
You must read the storage and transportation instructions.



Be careful
The parts inside may be contaminated with chemical materials, which may be harmful, so pay attention to protection.



Be careful of chemical splashing.
Chemicals may spill out of the hydraulic end due to pressure differences. Before treatment, the system should be depressurized.

5.1.1 Clean the valve Staff：technicist



Beware of personal injury and equipment damage.
Chemicals may also spill from the hydraulic end, for example, if ball valves are not serviced correctly.
- Ball valve shape and corrosion resistance should be consistent, use new parts.
- When installing the valve, pay attention to the direction of liquid flow.
1 Suction end unscrew valve seat
Carefully remove parts from valve body
3 Replace worn parts
4 Clean other parts
5 Checking Parts

Repair the check valve

6 Place the valve ball and valve pad
7 Screw the seat on

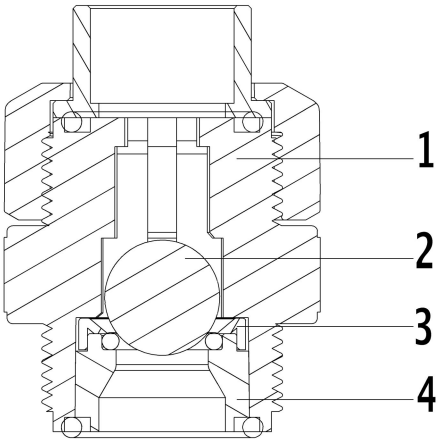

1 valve body
2 valve ball
3 ring
4 valve gasket

5 .Maintenance and fix

5.1.2 To replace diaphragm Staff: technicist

Warning

There may be some chemical feed pooling behind the diaphragm and leakage inside the backplane, depending on the design.
—This factor must be taken into account during maintenance, especially when there is a danger.

· Take protective measures if necessary.
· Read the incoming chemical safety data sheet.
· System pressure is released.

1 empty the hydraulic end (turn the hydraulic end over, dump the chemical feed, wash it with suitable medium, when there is harmful material, wash the hydraulic end thoroughly).
2 Pump in the running state, adjust the stroke button, until 0%, can no longer adjust.
3 Turn off the pump.
4. Remove the pipe connectors on the feed and drain sides.
Remove 6 screws from the pump head.
6 Remove the pump head.

7 Loosen diaphragm clockwise.
8 Remove diaphragm from diaphragm connecting rod.
9 Try to screw the new diaphragm counterclockwise onto the diaphragm link.
- Rotate diaphragm counterclockwise by hand to diaphragm link until tight.
10 If not, clean the dirt and iron from the thread and attach the diaphragm to the diaphragm connecting rod.
11 Install the pump head on the backplane
12 Tighten the bolts.
13 Start pump and adjust stroke length to 100%.
14 Tighten the bolt further, see torque below.



Be careful of chemical spills
To check bolt torque, chemicals may spill from hydraulic end.
−Check the firmness of bolts after 24 hours of operation.
−After 3 months of pump head use, check bolt torque again.

Parameter	Data	Unit
Tightening torque of bolts	9.0	Nm

6 . Troubleshooting and Solution

6.1 Troubleshooting Solution

Safety information



Be aware of the dangers of unknown chemicals.
If dangerous, or unknown, chemicals are used, there is a chance that the pump will overflow when it is treated.
−Take proper protective measures (protective glasses, protective gloves, etc.) before handling the pump read the feeding safety data sheet.
−Before handling the pump, drain the hydraulic end and clean it.



Be careful of chemical splashing.
Chemicals may spill out of the hydraulic end due to pressure differences.
−Release the pressure before any repair or maintenance.



Warning
Be aware of the danger of electric shock.
−Cut off the power supply before handling the motor.

Error description	Cause	Solution	Staff
Cut off the power supply before handling the motor.	The valve is dirty or worn out	Service valve, see service section	technicist
Pump cannot reach high pressure	The valve is dirty or worn out	Service valve, see service section	technicist
	Motor wiring error	1 Check voltage and frequency 2 Connect the motor correctly	Electrician
	under voltage	processing failure	Electrician
The drive motor is very hot	The drain end is blocked	Clean the drain end	technicist

6. 2 Disuse of the product

Disuse of the product



Be aware of hazards from chemical residues.
After completion of pump operation, there will be some normal chemical residue at the hydraulic end. These chemical residues are harmful to human health.
Before handling pumps, read the safety information and parameters in the "Storage, Transportation and Dismantling" section.
Clean the hydraulic end thoroughly. Read incoming chemical safety data sheet.



Be aware of the dangers of unknown chemicals.
If dangerous or unknown chemicals are used, they may overflow when handling the pump.
- Take proper protective measures (protective glasses, protective gloves, etc.) and read the incoming chemical safety data sheet before handling the pump.
- Before handling the pump, drain and clean the hydraulic end.



Be careful of chemical splashing.
Chemicals may spill out of the hydraulic end due to pressure differences. Release the pressure before any repair or maintenance. If the product is not used for a period of time, carefully pay attention to storage, shipping and unpacking information.

7. Technical Data

Long-term product discontinuation Staff: technicist

1 Cut off the main power supply.

2.Turn the hydraulic end upside down, empty and dump the chemical material inside.

3.Clean the hydraulic end with appropriate medium. If harmful chemical materials are used, clean the pump head thoroughly.

4.Drain the gear oil, refer to section - Maintenance.

Short-term product outage Staff: technicist



Be careful

Gear oil pollutes the environment.

- Drain the gear oil inside the pump.
- Pay attention to local regulations.

7.1 Technical data

7.1.1 Performance data

GX 0.25kw, 1400rpm, 380V, 50Hz								
Type	Pump flow at maximum back pressure		Max stroke/frequency		Suction lift	Connection	Power	Weight
GX	Bar	L/hr	ml/stroke	Stroke/min	mWC	G-DN	kw	(PVC/SS)
120	5	120	13.3	150	3	1/2”-15	0.25	12.1/14.5
260	5	260	29	150	3	1/2”-15	0.25	12.1/14.5
400	5	400	44.4	150	3	1/2”-15	0.25	12.1/14.5

All data are water temperature of 20℃, suction range is liquid suction end and hydraulic end are filled with water, and installed correctly.

Repeatability ±2% when accuracy is above 30% of stroke.

7.1.2 Material in contact with a chemical medium

Material	Pump head	Connection parts	Seal	Valve ball	Valve gasket
PC	PVC	PVC	EPDM	silicon boride	EPDM
TT	PVDF	PVDF	PTFE	ceramic	FFKM
SS	Stainless steel	Stainless steel	PTFE	Stainless steel	Stainless steel

7.1.3 Degree of protection and security requirements

The degree of protection Protection against moisture and contact

According to IEC529, EN60529, DINVDE0470 part I complies with IP55.

Security needs Main power supply should have ground wire.

7.2 Environmental conditions

7.2.1 Temperature

Parameter	Data	Unit
Storage and transportation temperature	-10...+50	˚C
Operating ambient temperature (drive)	-10...+45	˚C

7. Technical data

PC fluid end

Parameter	Data	Unit
Long-term maximum operating pressure maximum temperature	45	˚C
Maximum temperature in 15 minutes at a maximum pressure of 2bar	70	˚C
Lowest temperature	-10	˚C

TT fluid end

Parameter	Data	Unit
Long-term maximum operating pressure maximum temperature	45	˚C
Maximum temperature in 15 minutes at a maximum pressure of 2bar	120	˚C
Lowest temperature	-10	˚C

SS fluid end

Parameter	Data	Unit
Long-term maximum operating pressure maximum temperature	45	˚C
Maximum temperature in 15 minutes at a maximum pressure of 2bar	120	˚C
Lowest temperature	-10	˚C

7.2.2 Climate

Parameter	Data	Unit
Maximum air humidity *	95	%humidity

*Non-condensate

7.2.3 Gear oil

Viscosity Grade (ISO 3442)	Oil mass
Maximum air humidity*	0.25L

7.3 Noise

Noise grade<10dB (A), Maximum stroke length, maximum stroke frequency, maximum back pressure. DIN EN12639 (noise test)。

8. Dimensional drawing

GX dimensional drawing, unit:mm

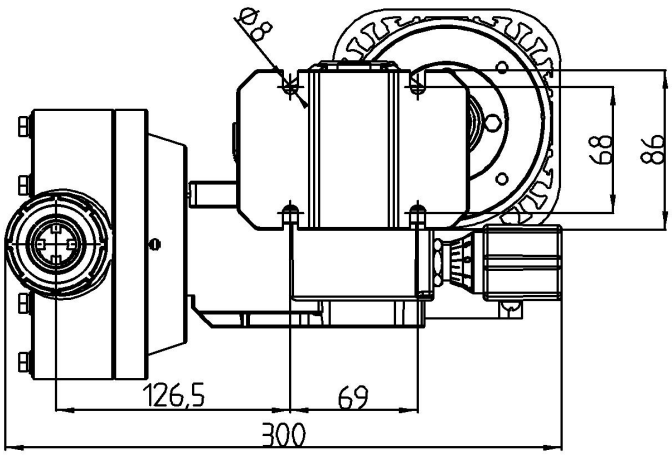

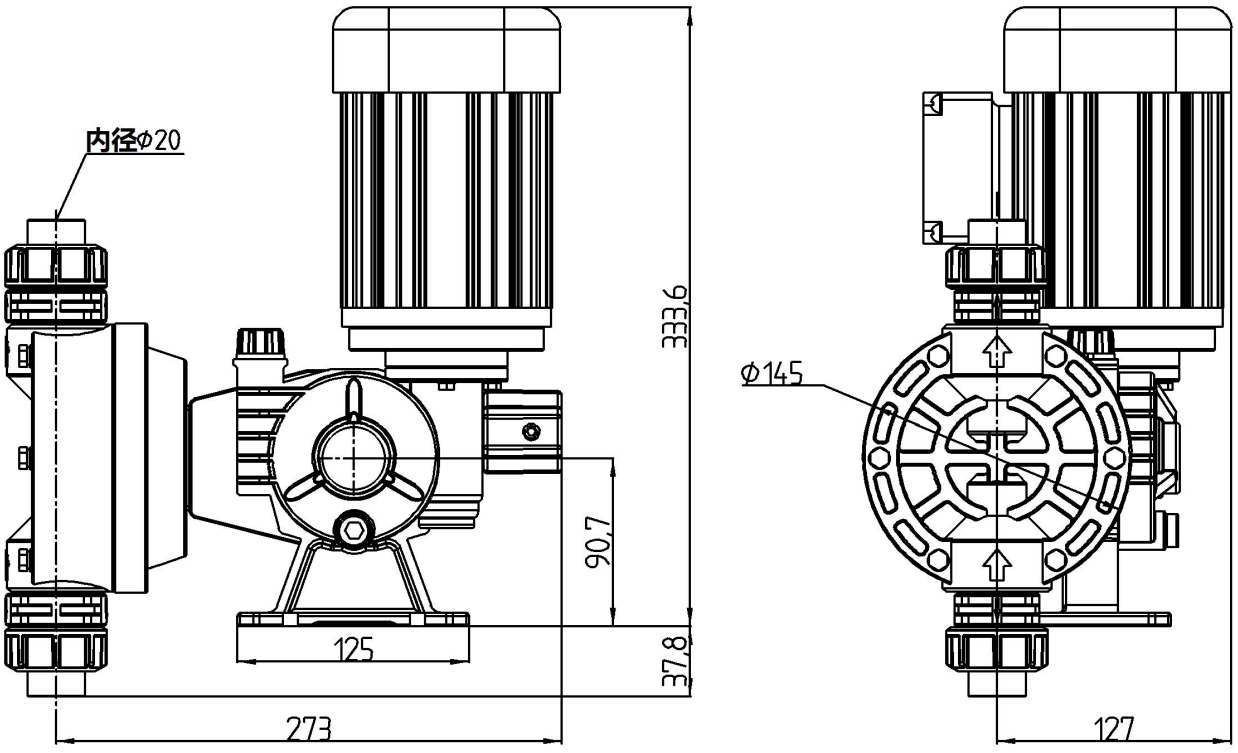

9. Performance Curve

Metering pump performance

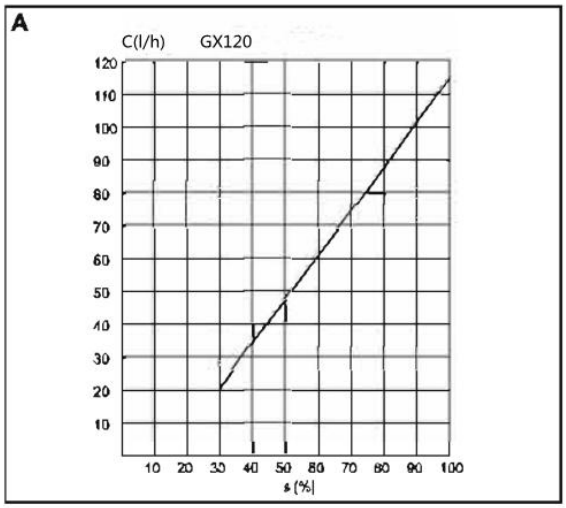

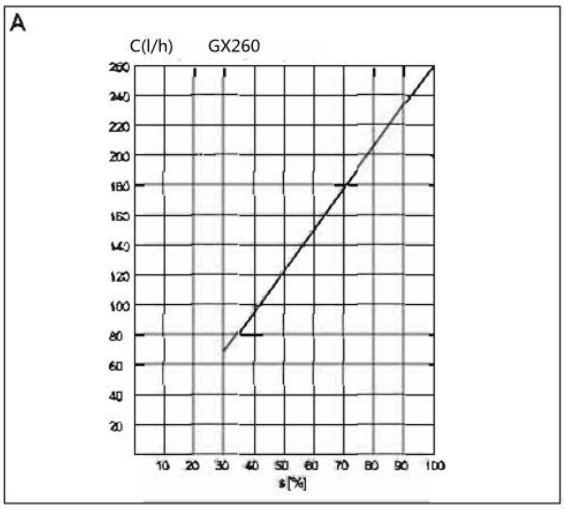

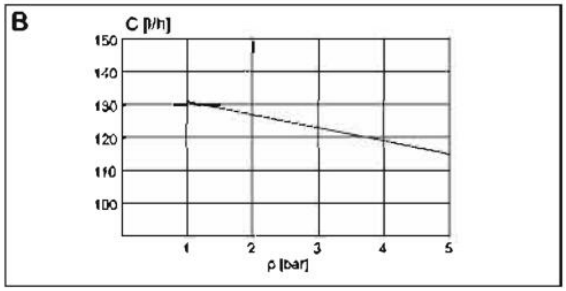

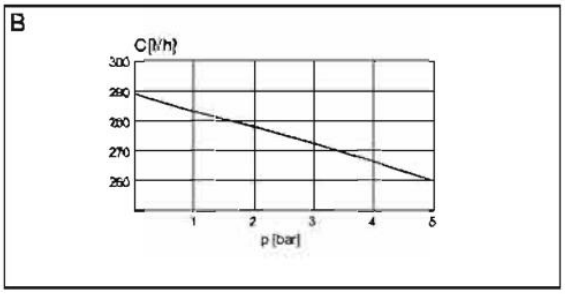

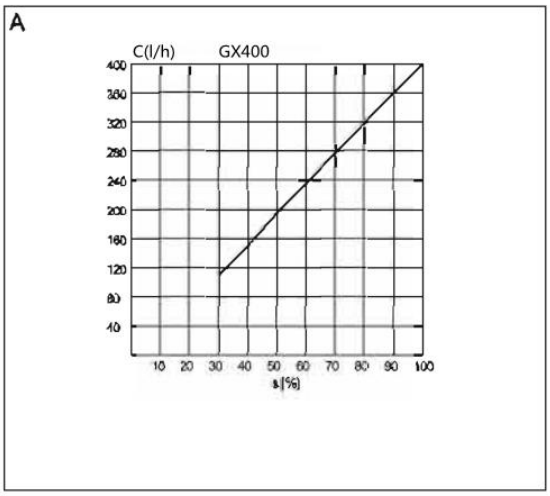

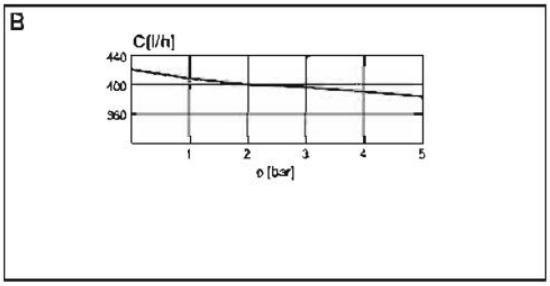

A) Relationship between stroke length and flow at maximum stroke frequency and moderate back pressure.

B) Flow and pressure relationship.

SHANDONGLANGOMETERINGPUMPTECHNOLOGYCO.,LTD
ADD：Building 2, No. 850 Government Street, Muping District,
Yantai City, Shandong Province
WEBSITE:www.langopump.com
E-MAIL：sale@langopump.com
Ver.:GX-M-2024/A